CHANGES

V2.1: change C9 to 1nF to avoid auto-start

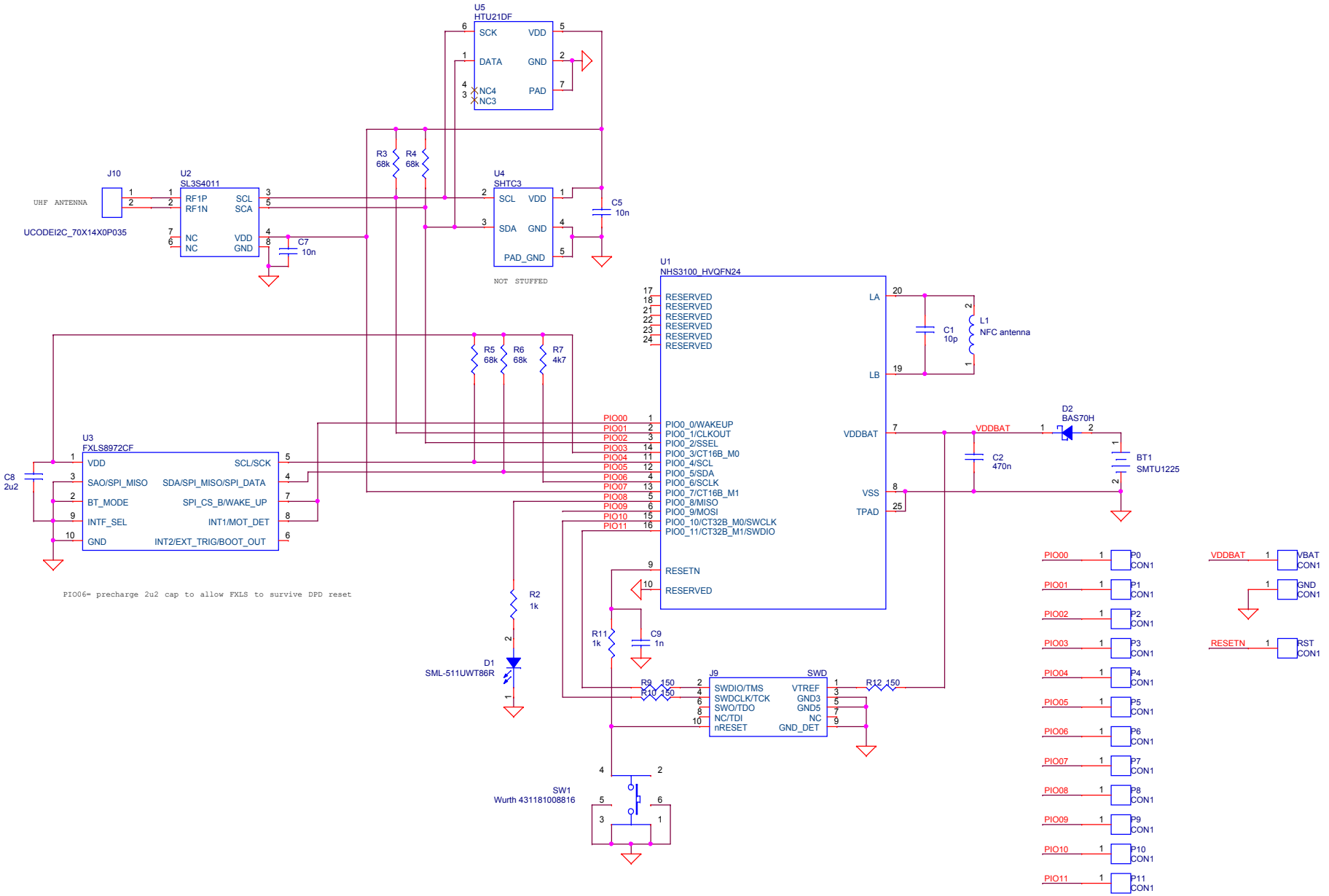

Title	NHS3100 Sensor Board	
Size A3	Document Number 1000	Rev 2.1
Date: Tuesday, January 22, 2019	Sheet 1 of 1	