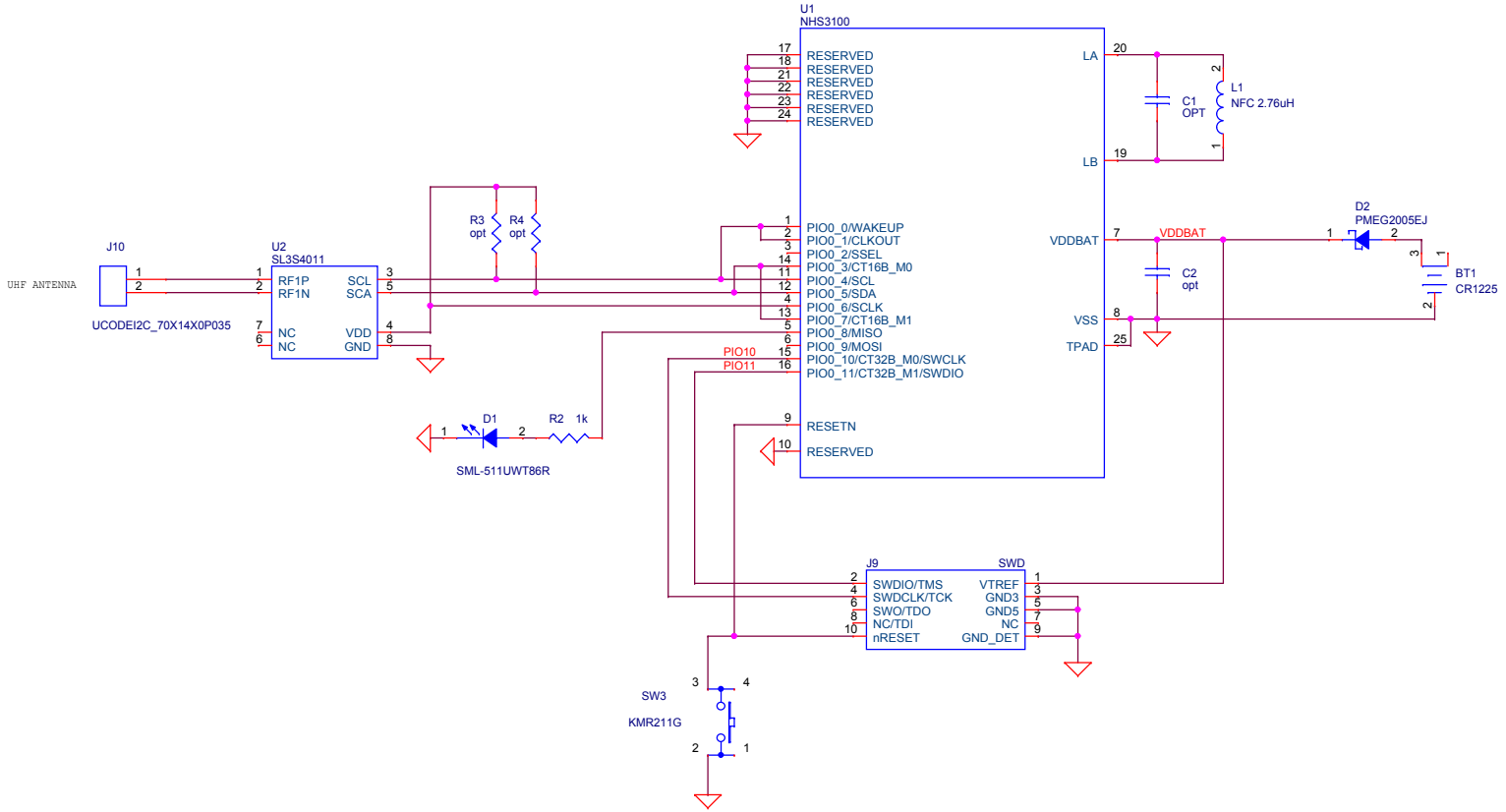

Title	NHS3100 Temperature logger + UCODE I2C	
Size A3	Document Number 1000	Rev 1.1
Date: Monday, July 17, 2017	Sheet 1 of 1	