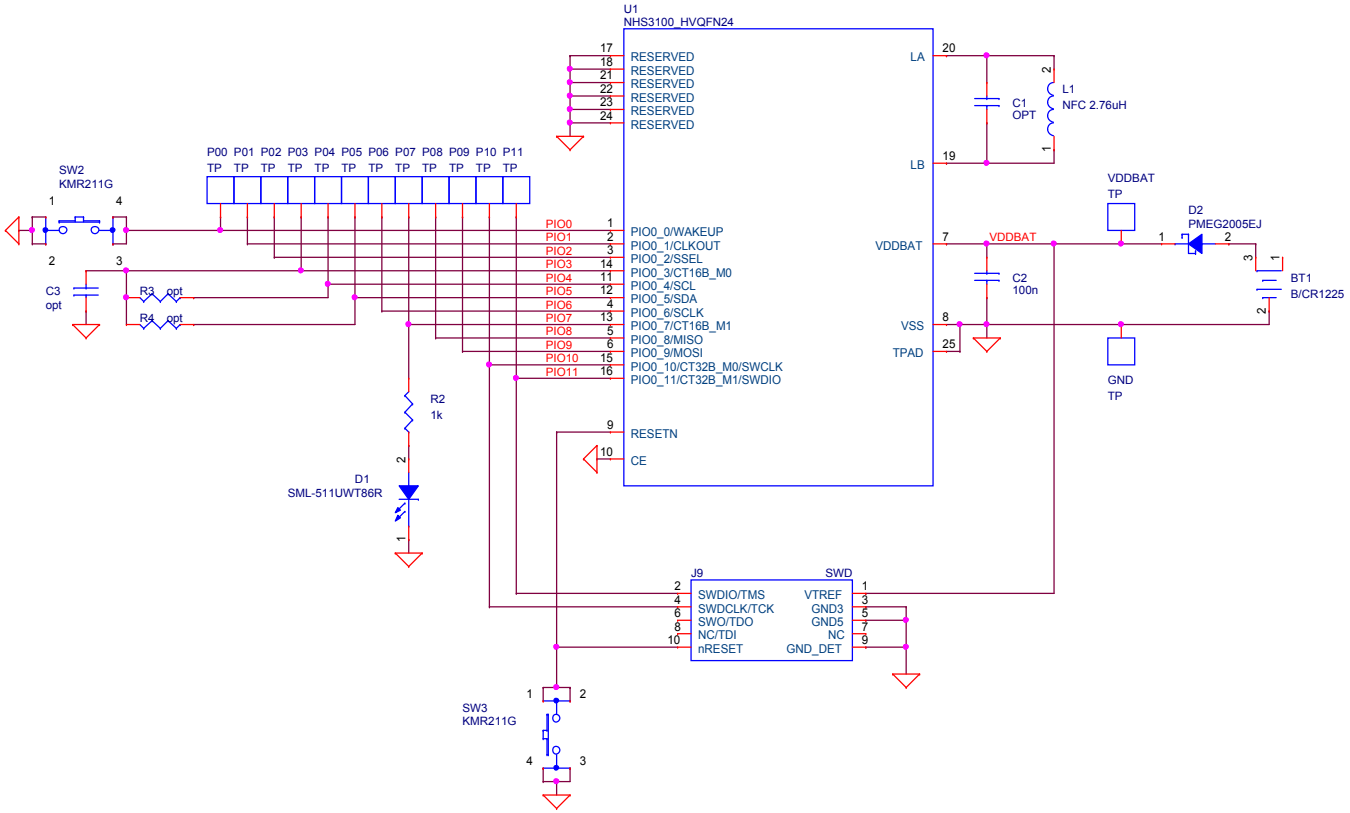

Title	NHS3100 Temperature logger PCB	
Size A3	Document Number 1000	Rev MRA2
Date: Friday, March 30, 2018	Sheet 1 of 1	